SUPERBLOCK SP01

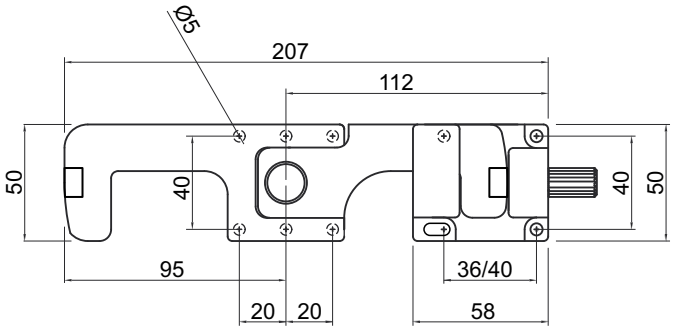

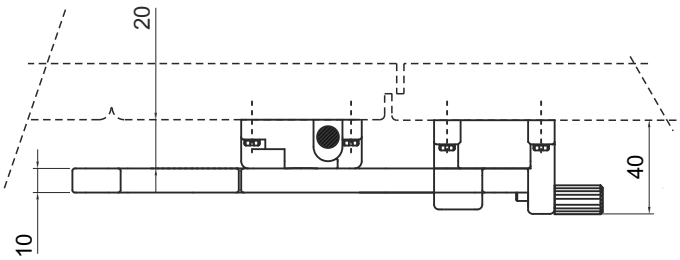

SUPERBLOCK SP01

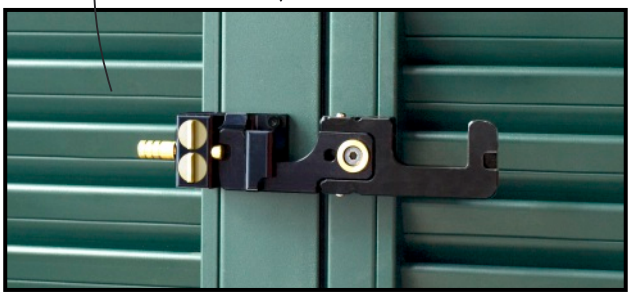

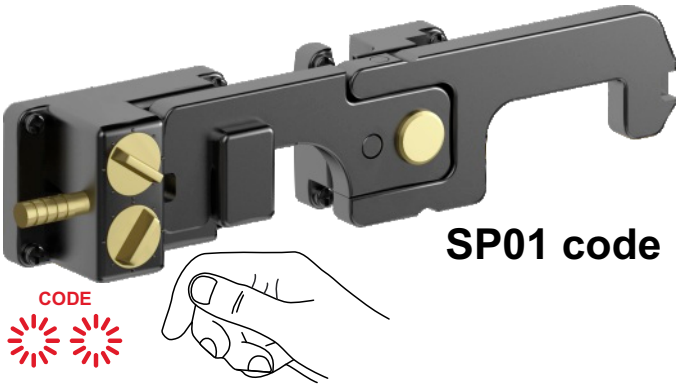

SP01 code
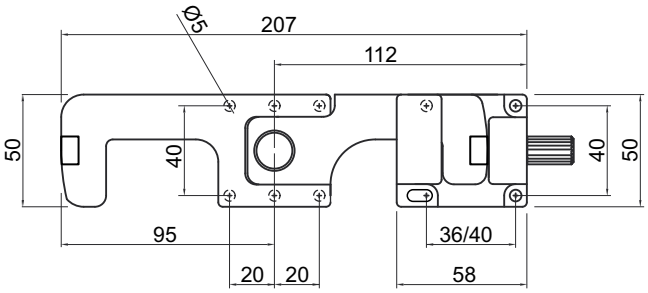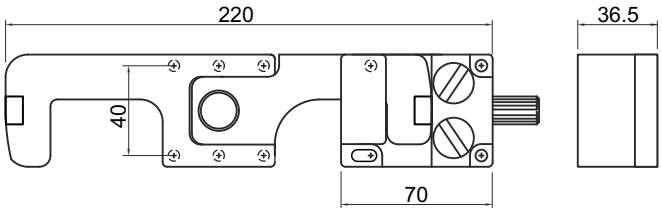
SP01